WAVE

Corner Wall Hung Vanity 450mm Matte White

5 YEAR WARRANTY

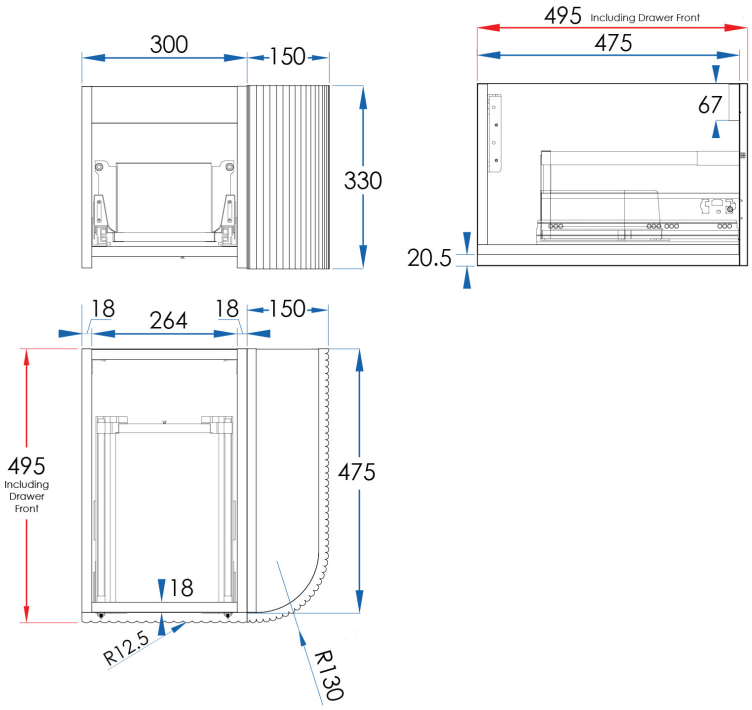

SPECIFICATIONS

Size	450x330x495mm (Including Drawer)
Material	Moisture Resistant 2 Pac with Full Length Extension Runners with Adaptive Cushioning which close gently and silently. DTC Drawer Runner Hardware.
Colour/Finish	Matte White Cabinet, Matte White Drawer Front and 1x Curved Corner cabinet with a sleek look and delicate detailing.
Installation	Wall Mount. Corner Cabinet can be installed either to the Left or Right side of Cabinet.
Code	WHW450-M
Warranty	5 Year replacement product and parts: 1 year labour
Important Info	This vanity requires a **VUBEND02 (U-Bend).** Sold Separately.
Notes	Tops, Handles, Tapware and Basins Sold Separately

CASA LUSSO

Available at hb Highgrove Bathrooms.com.au

Due to our policy of continuous development, all designs and measurements are intended only as a guide and are subject to change without notice. Being hand made products they are subject to a size variance E&OE. This brochure is representative of the actual products at time of printing. Please confirm all particulars before purchase. Casa Lusso recommends having the product on site before commencing rough in. For our own established efforts supporting environmental and health preservation all of our Vanities are made to the commercially recognised E1 Standard.